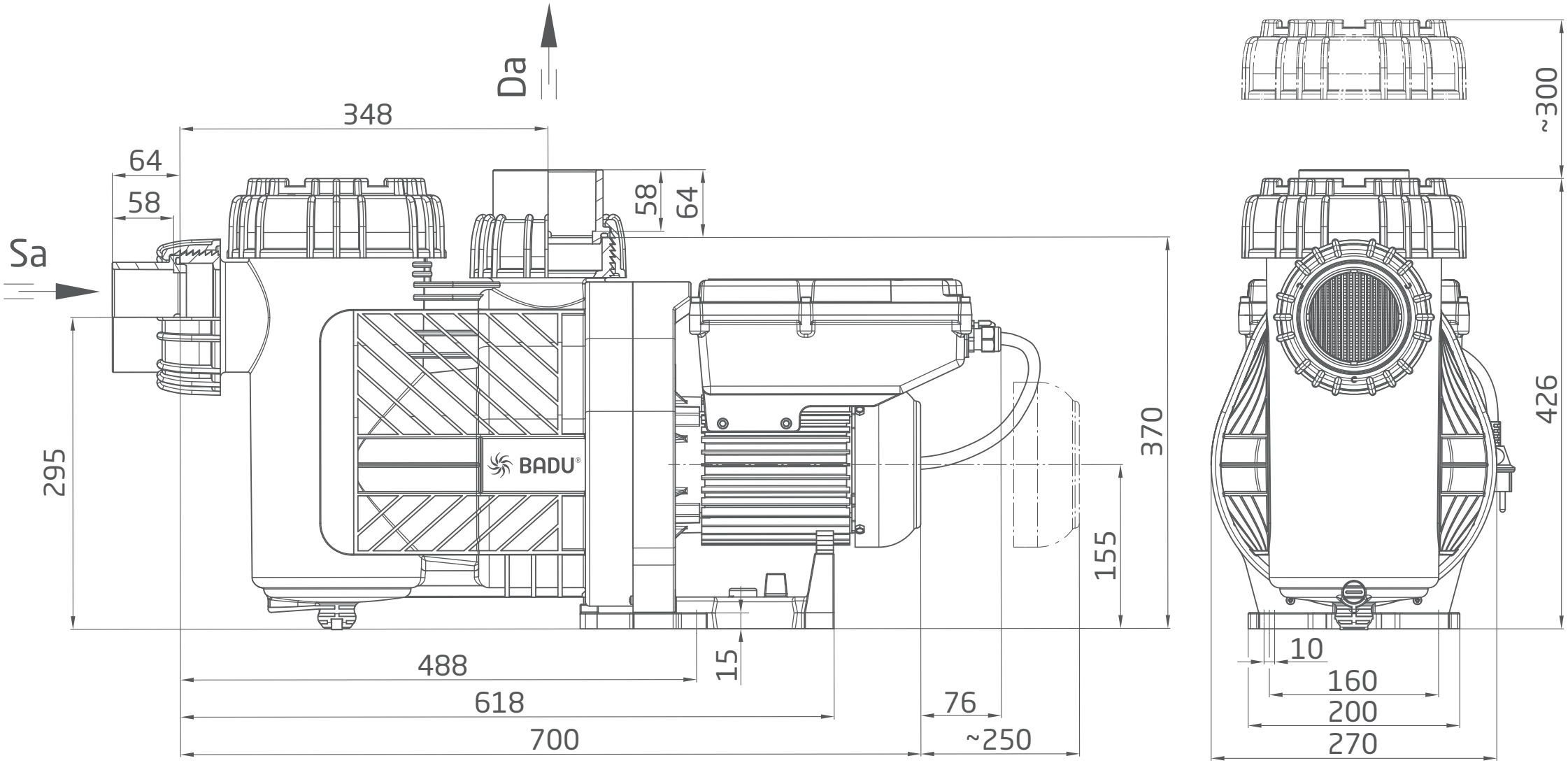BADU Eco Flex
D90.80.019